RECESSED POCKET ENCLOSURES

Hanger & Closure: Ceiling Mount Details

SECTION DETAIL

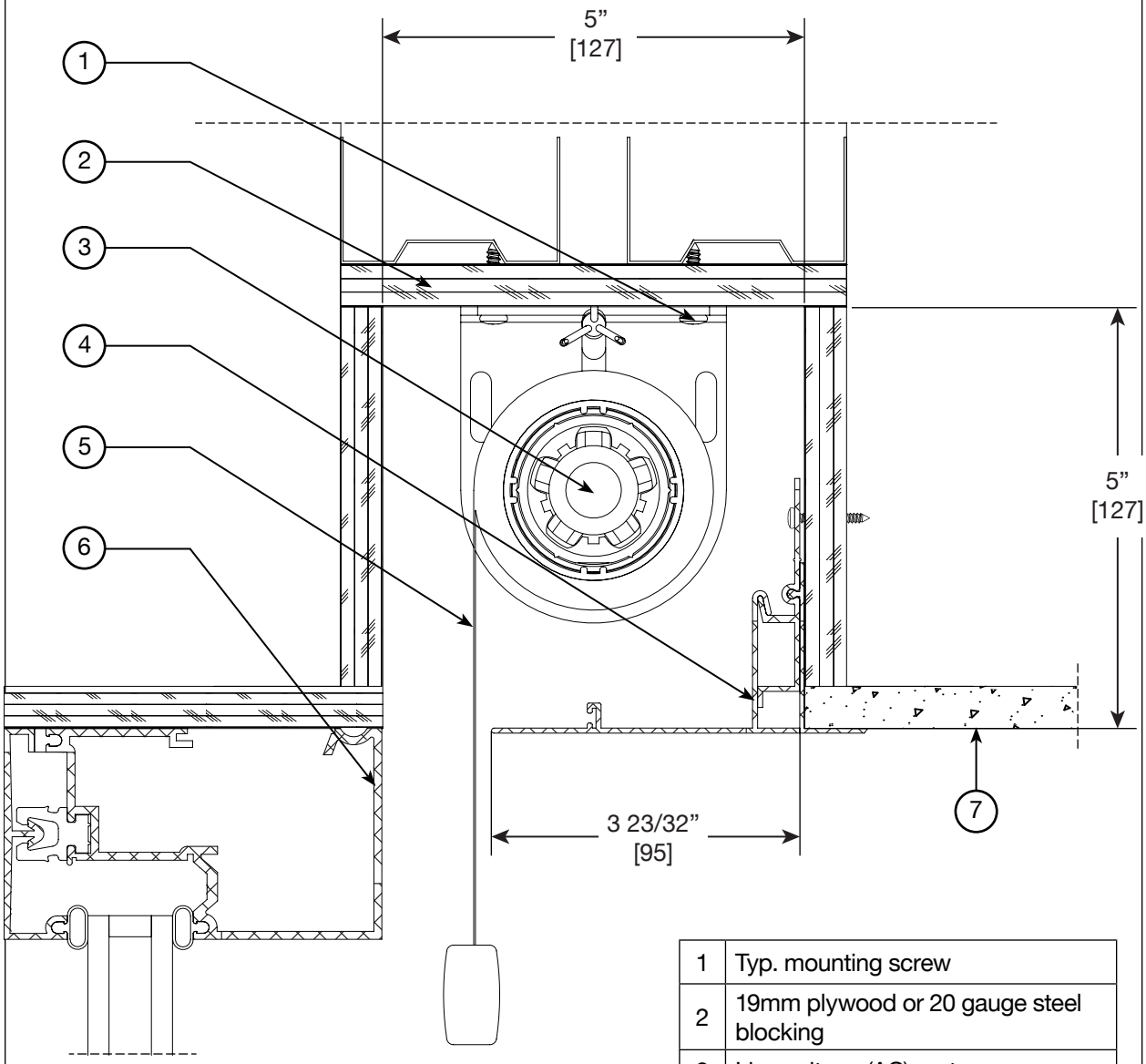

1	Typ. mounting screw
2	19mm plywood or 20 gauge steel blocking
3	Line voltage (AC) motor
4	Hanger and closure system
5	Roller shade (fabric, tube, bottom bar, and mounting brackets)
6	Window mullion
7	Ceiling (dry wall or dropped ceiling panel)

Notes:

- Junction box to be located within 3ft (0.91M) of the motor head location.
- Motor head location will be determined with a Sun Glow representative.
- Blocking and pocket to be supplied by others.

All dimensions are in inches [mm]

SCALE:	1:2	DWG NUMBER:	MTRLS5D–01	DATE:	03/03/2017	REV:	11	DRAWN BY:	M. E.